REVISION HISTORY			
REV	DESCRIPTION	DATE	APPROVED

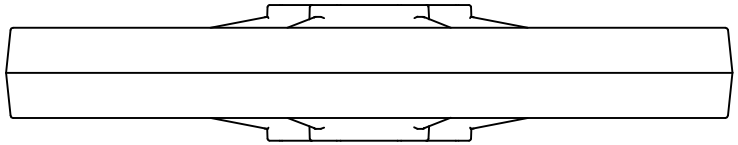

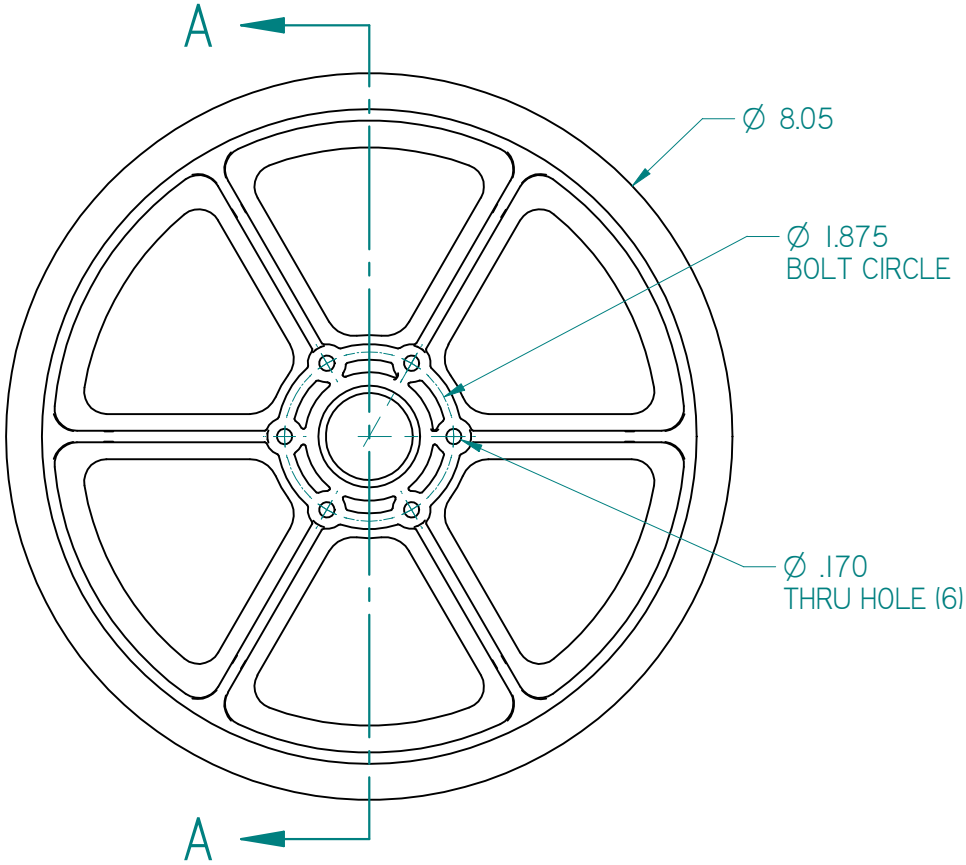

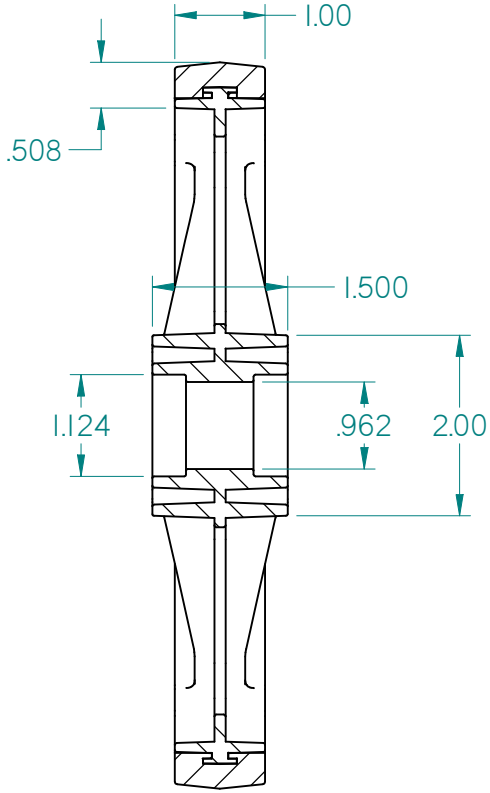

SECTION A-A

	NAME	DATE
DRAWN	Andy Baker	01/07/10
CHECKED		
ENG APPR		
MGR APPR		

UNLESS OTHERWISE SPECIFIED
DIMENSIONS ARE IN INCHES
ANGLES ±0.5°
2 PL ±0.01, 3 PL ±0.005

AndyMark.biz
Standard Solutions for Competition Robots

TITLE: 2010 8" FIRST Wheel

SIZE: A2 | DWG NO: 2010 8 wheel.dft | REV: 1

FILE NAME: 2010 8 wheel.dft

SCALE: | WEIGHT: | SHEET 1 OF 1