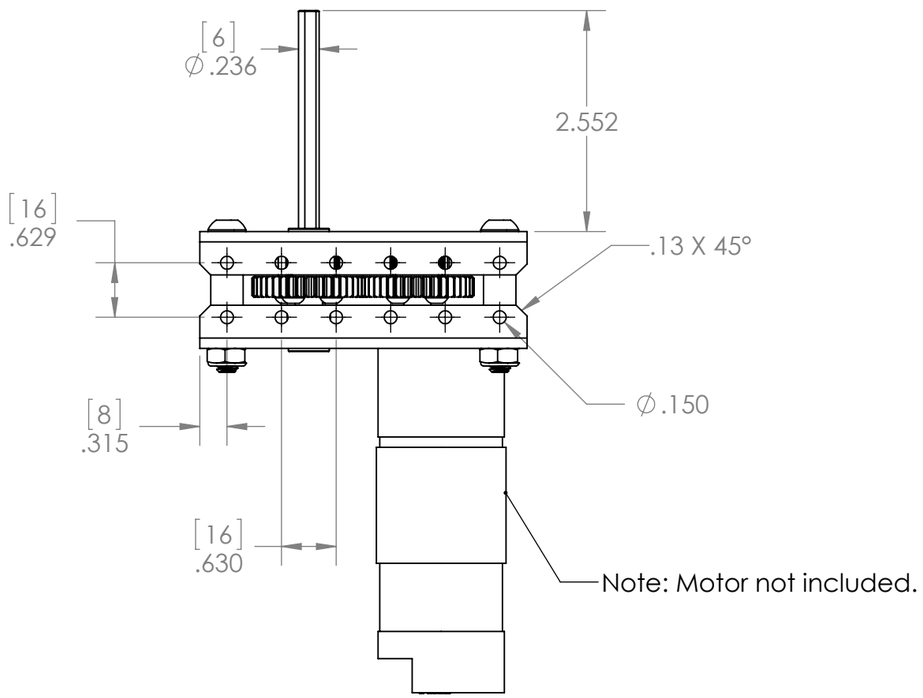

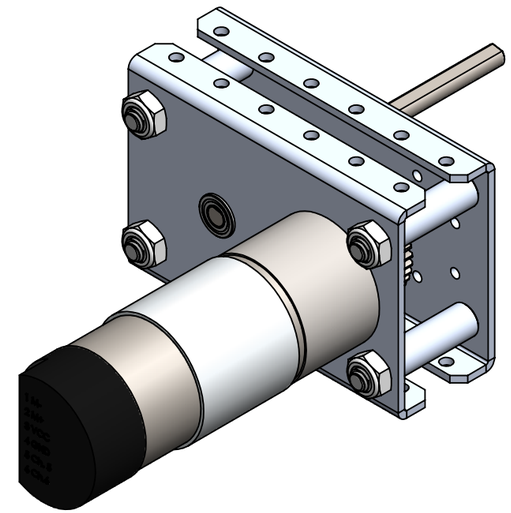

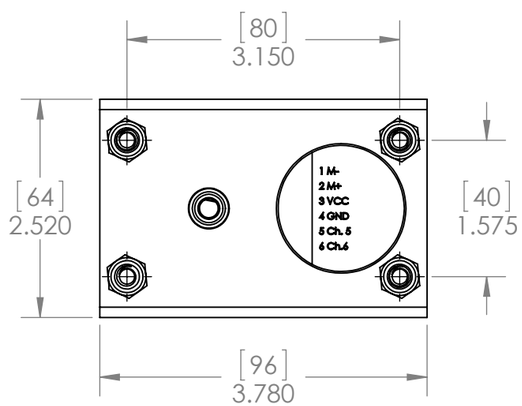

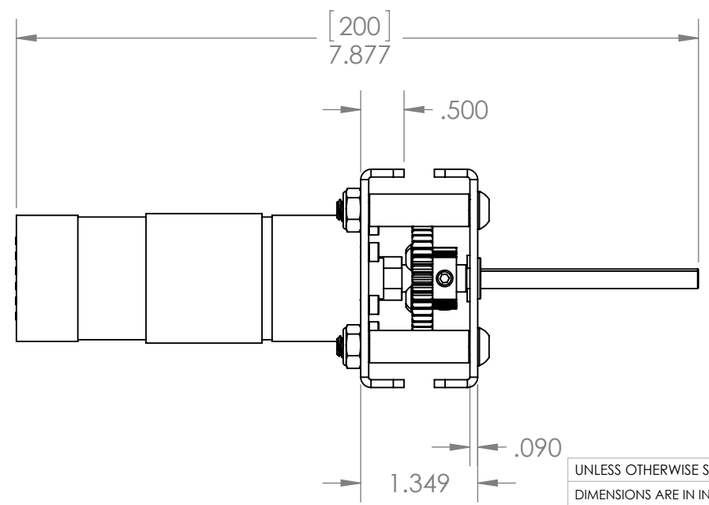

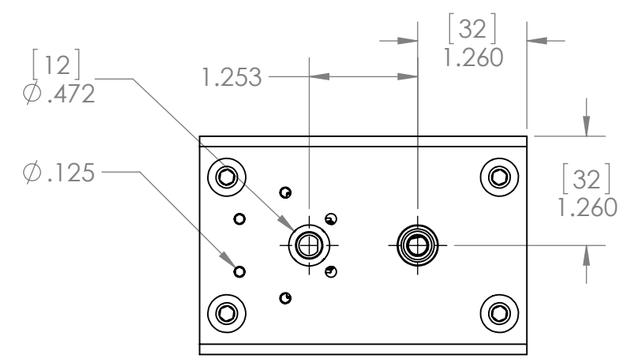

UNLESS OTHERWISE SPECIFIED:		NAME	DATE
DIMENSIONS ARE IN INCHES TOLERANCES: FRACTIONAL ±1/32 ANGULAR: MACH ± BEND ±5° ONE PLACE DECIMAL ±0.1 TWO PLACE DECIMAL ±0.01 THREE PLACE DECIMAL ±0.005	DRAWN	NL	9/8/16
	CHECKED		
	ENG APPR.		
	MFG APPR.		
INTERPRET GEOMETRIC TOLERANCING PER:	Q.A.		
MATERIAL	COMMENTS:		
FINISH	DUAL DIMENSIONS ARE IN MILLIMETERS.		
DO NOT SCALE DRAWING			

AndyMark

TITLE:

PICOBOX UNO LAYOUT

SIZE	DWG. NO.	REV
B	am-3447	1

SCALE: 1:1.75 WEIGHT: SHEET 1 OF 1