REVISIONS			
REV.	DESCRIPTION	DATE	APPROVED
1	ORIGINAL PRINT	9/6/2016	N. LAWRENCE

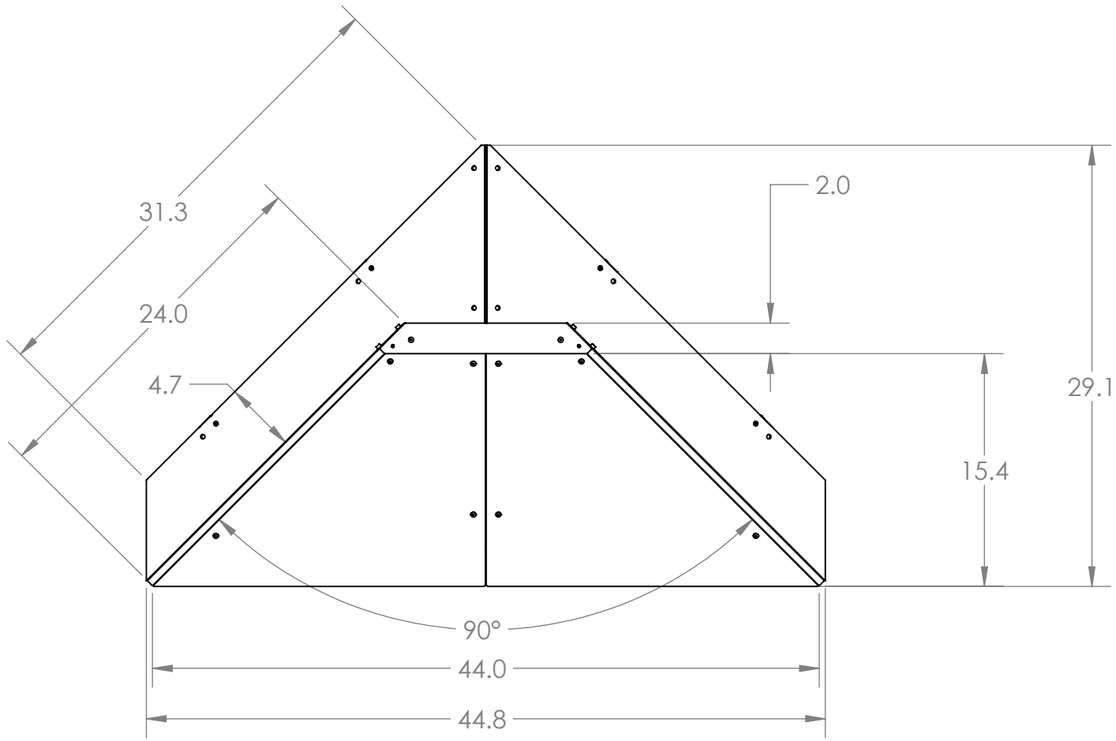

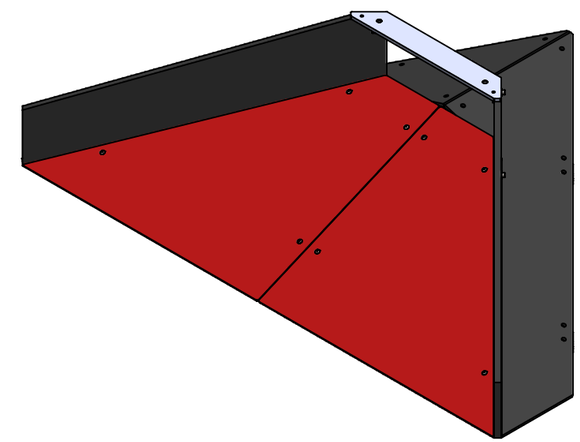

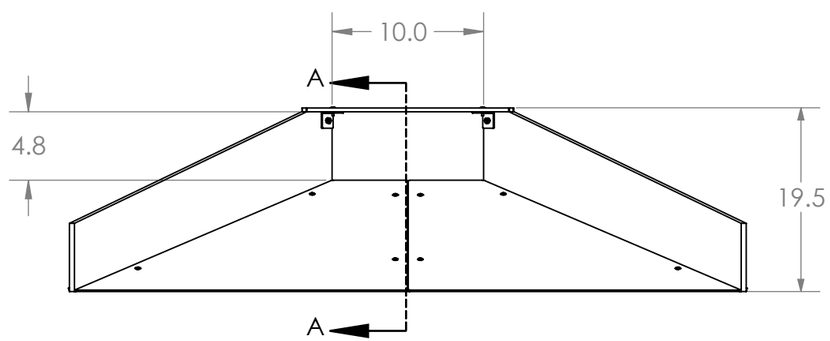

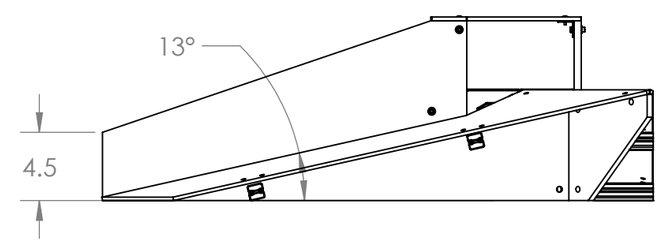

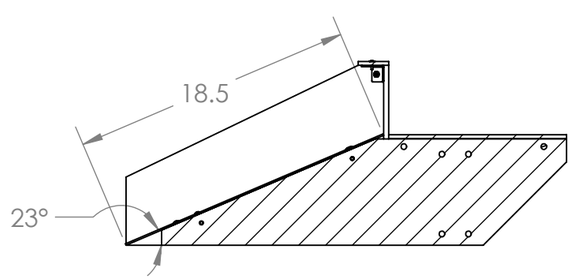

SECTION A-A

UNLESS OTHERWISE SPECIFIED:		NAME	DATE
DIMENSIONS ARE IN INCHES TOLERANCES: FRACTIONAL ±1/32 ANGULAR: MACH ± BEND ±5° ONE PLACE DECIMAL ±0.1 TWO PLACE DECIMAL ±0.01 THREE PLACE DECIMAL ±0.005	DRAWN	NL	9/6/16
	CHECKED		
	ENG APPR.		
	MFG APPR.		
INTERPRET GEOMETRIC TOLERANCING PER:	Q.A.		
MATERIAL	COMMENTS: PLEASE REFER TO FIELD ASSEMBLY AND FIELD SETUP GUIDES FOR MORE ASSEMBLY AND SETUP INSTRUCTIONS.		
FINISH			
DO NOT SCALE DRAWING			

AndyMark®

TITLE:

VELOCITY VORTEX CORNER VORTEX

SIZE	DWG. NO.	REV
B	am-3361R am-3361B	1
SCALE: 1:10	WEIGHT:	SHEET 1 OF 1