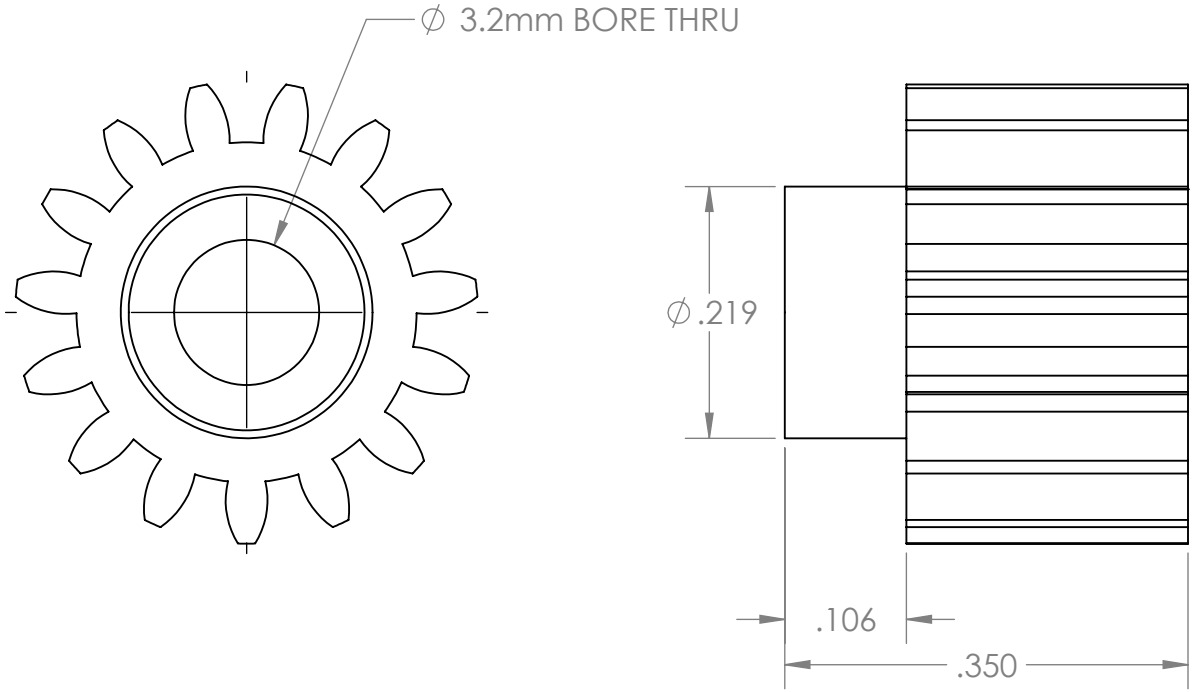

Module: 0.6
Pressure Angle: 14.5°

		UNLESS OTHERWISE SPECIFIED:		NAME	DATE
		DIMENSIONS ARE IN INCHES TOLERANCES: FRACTIONAL ± ANGULAR: MACH ± BEND ± TWO PLACE DECIMAL ± THREE PLACE DECIMAL ±	DRAWN	NL	1/15/2015
			CHECKED		
			ENG APPR.		
			MFG APPR.		
		INTERPRET GEOMETRIC TOLERANCING PER:	Q.A.		
		MATERIAL	COMMENTS:		
NEXT ASSY	USED ON	FINISH			
APPLICATION		DO NOT SCALE DRAWING			

TITLE:
P60 Pinion Gear First Stage 4:1

SIZE	DWG. NO.	REV
A	am-2892	
SCALE: 6:1	WEIGHT:	SHEET 1 OF 1

5 4 3 2 1