Rev	Discription of Changes
1	Original Print

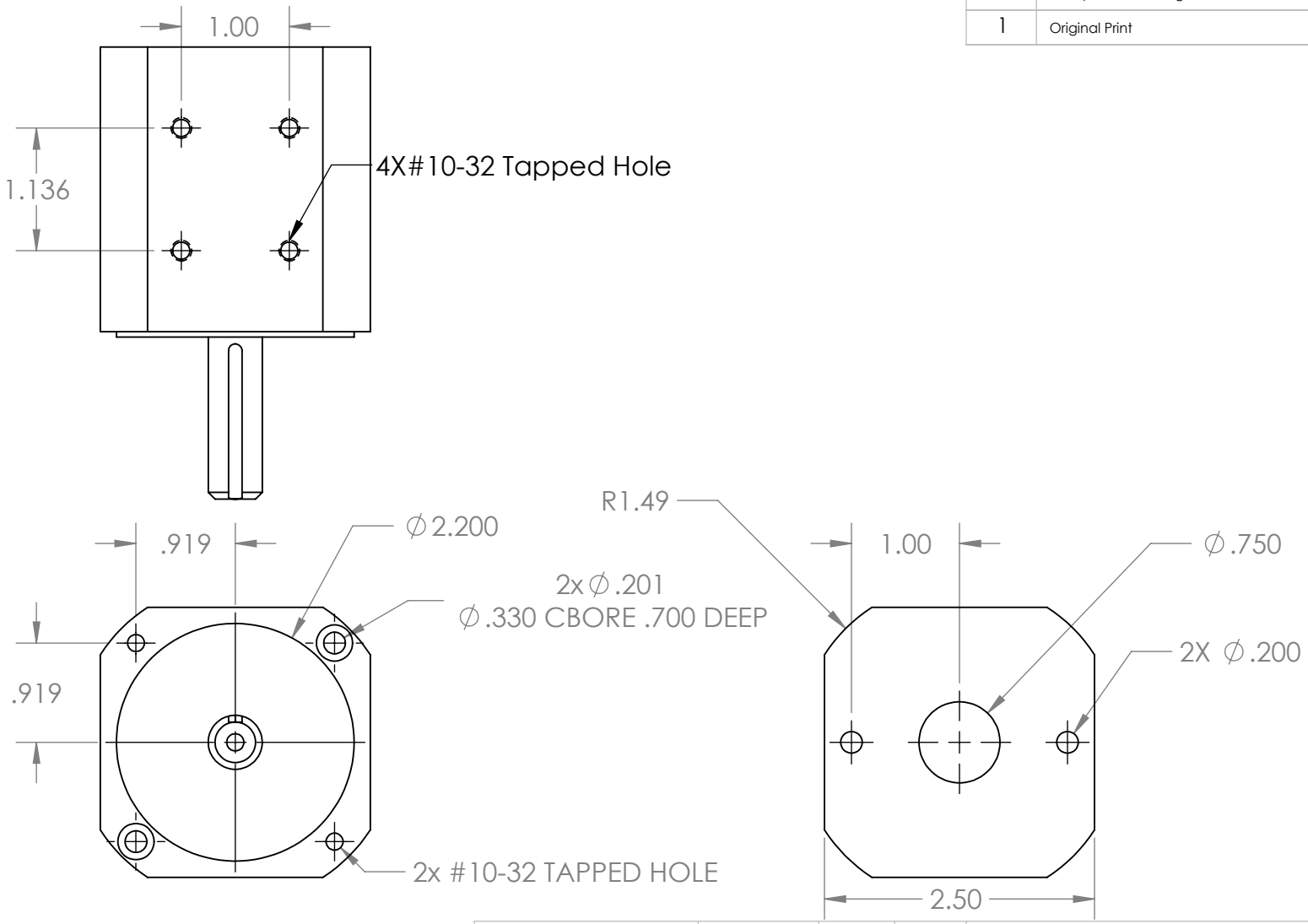

UNLESS OTHERWISE SPECIFIED:		NAME	DATE
DIMENSIONS ARE IN INCHES TOLERANCES: FRACTIONAL ± ANGULAR: MACH ± BEND ±5° TWO PLACE DECIMAL ±0.010 THREE PLACE DECIMAL ±0.005	DRAWN	NL	1/30/15
	CHECKED		
	ENG APPR.		
	MFG APPR.		
INTERPRET GEOMETRIC TOLERANCING PER:	Q.A.		
MATERIAL	COMMENTS:		
FINISH			
DO NOT SCALE DRAWING			

AndyMark

TITLE:

BB220 4:1 Layout

SIZE	DWG. NO.	REV
A	am-2879	1

SCALE: 2:3	WEIGHT:	SHEET 1 OF 1

5 4 3 2 1