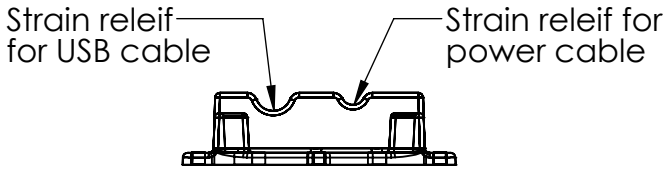

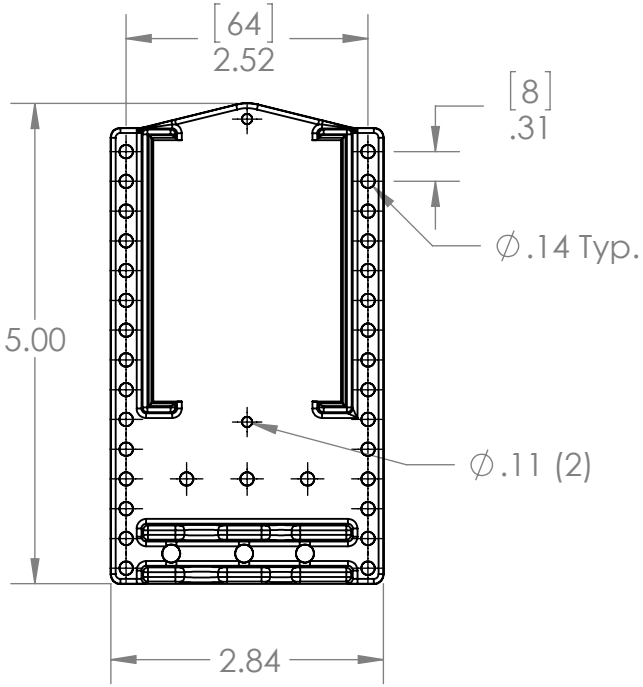

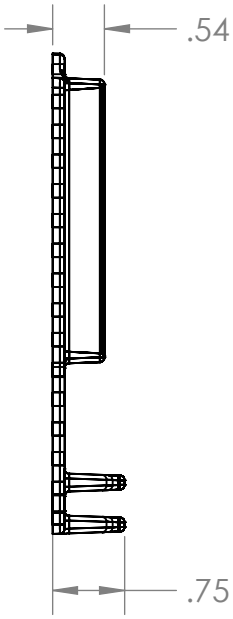

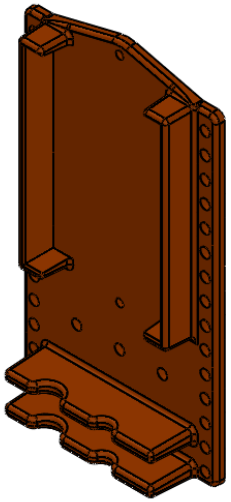

UNLESS OTHERWISE SPECIFIED:		NAME	DATE
DIMENSIONS ARE IN INCHES TOLERANCES: FRACTIONAL ± ANGULAR: MACH ± BEND ±5° TWO PLACE DECIMAL ±0.010 THREE PLACE DECIMAL ±0.005	DRAWN	DB	8/8/14
	CHECKED		
	ENG APPR.		
	MFG APPR.		
INTERPRET GEOMETRIC TOLERANCING PER:	Q.A.		
MATERIAL 3D Printed	COMMENTS: Dual dimensions are in millimeters		
FINISH DEBURRED			
DO NOT SCALE DRAWING			

AndyMark

TITLE:

Samantha Module Bracket

SIZE	DWG. NO.	REV
A		2

SCALE: 1:2	WEIGHT:	SHEET 1 OF 1

5 4 3 2 1