REVISION HISTORY			
REV	DESCRIPTION	DATE	APPROVED
3	MANY CHANGES	10-10-08	ARB

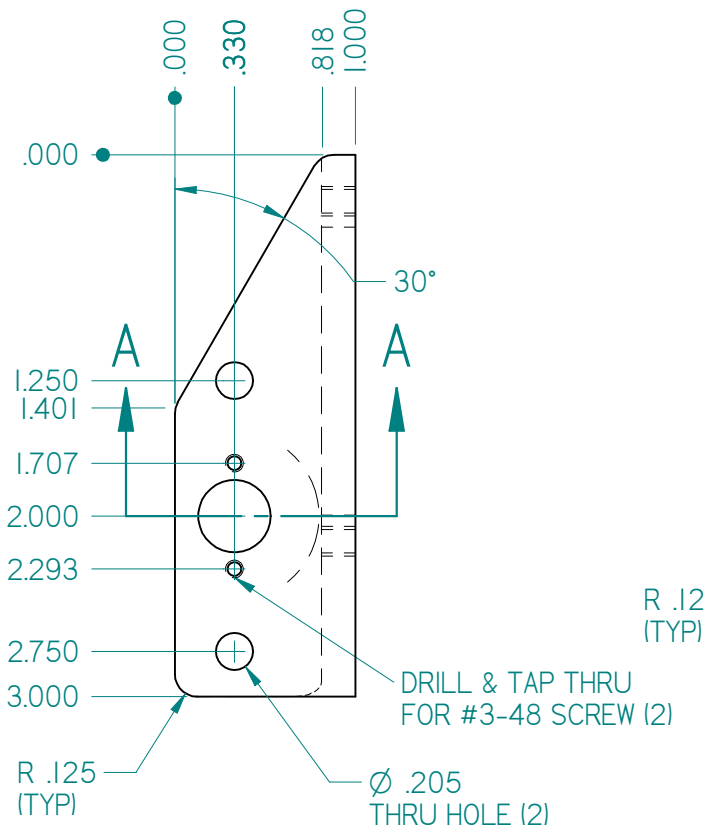

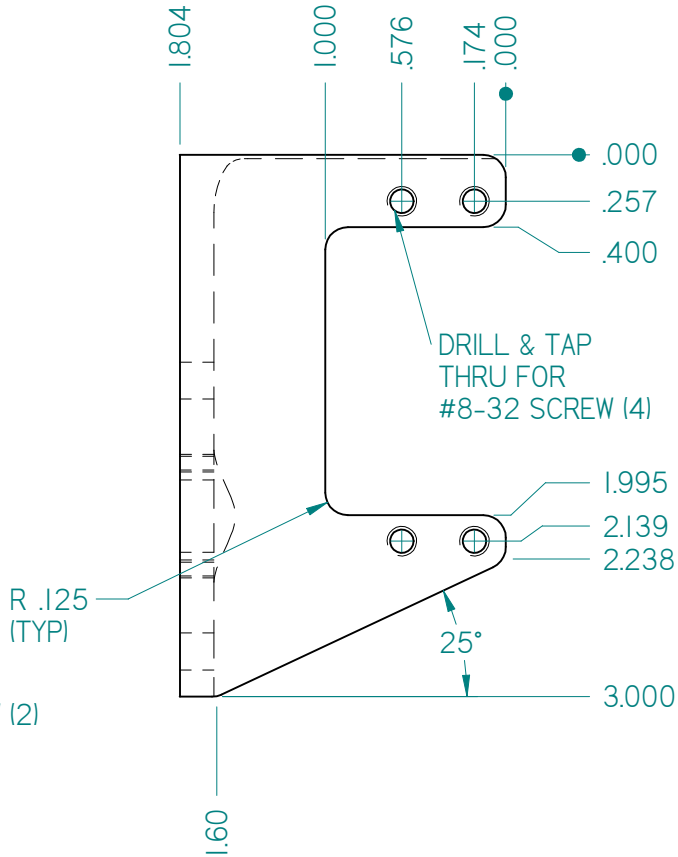

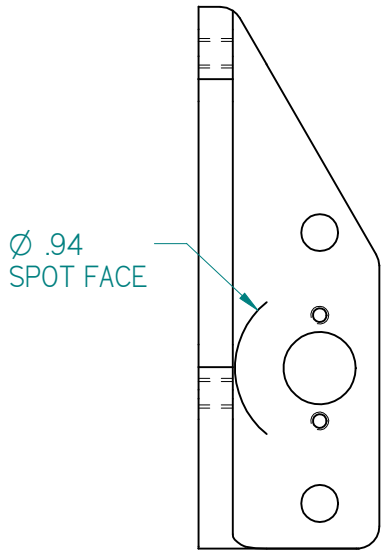

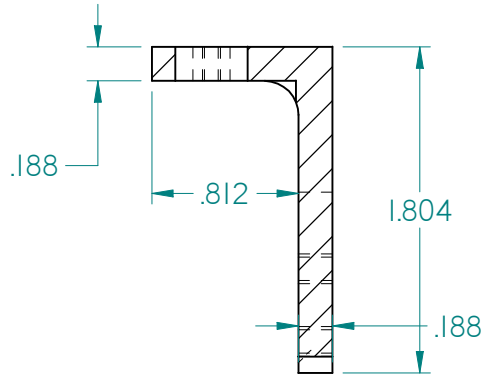

SECTION A-A

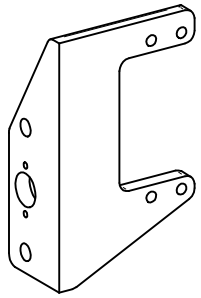

Material: 6061 Aluminum
Qty. per gearbox: 1
Finish: Tumble

AndyMark.biz

	NAME	DATE
DRAWN	Andy Baker	05/05/09
CHECKED		
ENG APPR		
MGR APPR		

UNLESS OTHERWISE SPECIFIED
DIMENSIONS ARE IN INCHES
ANGLES ±0.5°
2 PL ±0.01 3 PL ±0.005

SOLID EDGE
EDS-PLM SOLUTIONS

TITLE: Encoder Bracket

SIZE: A2 | DWG NO: SuperShifter_d11 | REV: 3

FILE NAME: super_d11-v2.dft

SCALE: | WEIGHT: | SHEET 1 OF 1