RoHS COMPLIANT

Description

On January 16, 2012, the E4P part number was modified.
Please see the E4P Part Number Change notification for more information.

The E4P miniature reflective encoder is designed to provide digital quadrature encoder feedback for high volume applications with limited space constraints. The E4P version utilizes an innovative, patented push-on codewheel which accepts shaft diameters of 2mm to .250".

The E4P reflective encoder is the leader for high quantity OEM applications, but the E4 is the ideal choice when a set-screw codewheel encoder is required (see the E4 page).

The E4P miniature encoder base provides mounting holes for two #3-48, length 1/4" or two M2.5x.45mm, length 6mm screws on a .586" bolt circle. When mounting holes are not available, a pre-applied transfer adhesive (with peel-off backing) is available for "stick-on" mounting.

The encoder cover is easily snapped onto the base and is embossed with the connector pin-out.

The E4P reflective series encoder can be connected by using a (high retention 4-conductor snap-in polarized 1.25mm pitch) connector. Mating cables and connectors (see the Cables / Connectors web page) are not included, and are available separately.

Features

- Miniature size
- Push-on hub - spring loaded collet design
- Minimum shaft length of .375"
- Fits shaft diameters of .079" to .250"
- Accepts +/-.020" Axial shaft play
- Off-axis mounting tolerance of .010"
- 100 to 360 cycles per revolution (CPR)
- 400 to 1440 pulses per revolution (PPR)
- Single +5V supply

US DIGITAL
1400 NE 136th Avenue
Vancouver, Washington 98684, USA
info@usdigital.com
www.usdigital.com
Local: 360.260.2468
Toll-free: 800.736.0194

E4P Differential

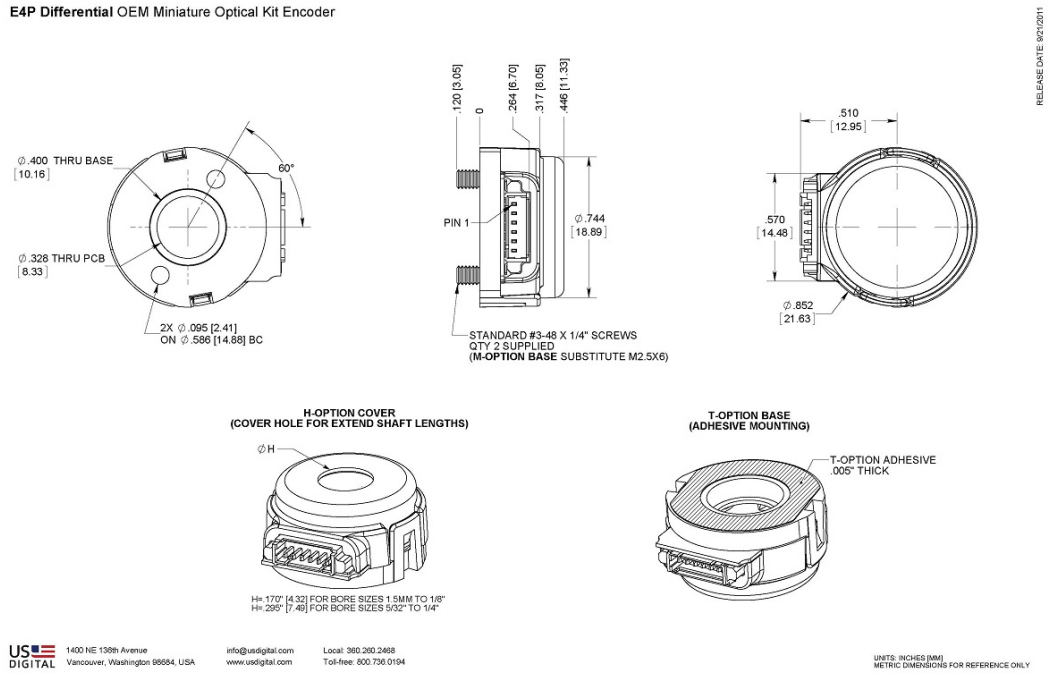

E4P Single Ended

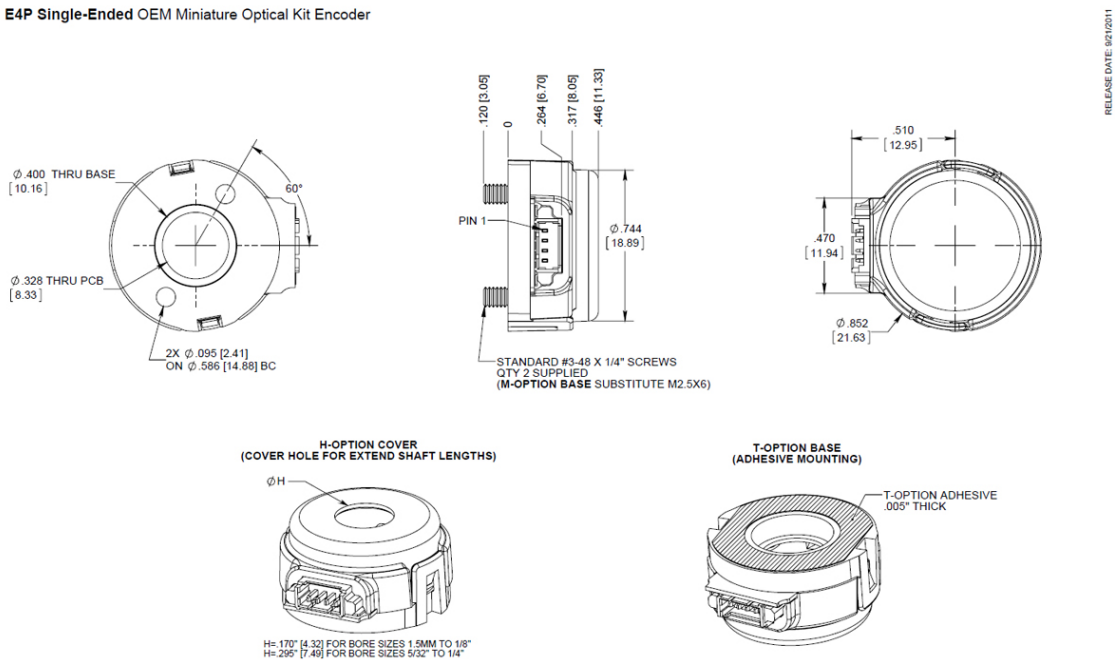

Environmental

Parameter	Value	Units
Vibration (5Hz to 2kHz)	20	G
Max. Relative Humidity	90	%
Storage Temperature	-40 to 100	C
Operating Temperature	-20 to 100	C
Electrostatic Discharge, Human Body Model Single-ended (**S**-option) Differential (**D**-option)	 ± 8 ± 15	kV

Mechanical

Parameter	Value	Units
Max. Shaft Axial Play	± .020	in.
Max. Off-axis Mounting Tolerance	± .010	in.
Shaft to Mounting Surface Perpendicularity	90 ± 1	deg.
Max. Acceleration	250000	rad/sec²
Maximum RPM (1) e.x. CPR = 360, max. rpm = 10000 e.x. CPR = 100, max. rpm = 36000	minimum value of (3600000/CPR) and (60000)	rpm
Codewheel Moment of Inertia	3.36 x 10^-6	oz-in-s²
Mounting Screw Size Default (D-option base) Metric (M-option base)	 #3-48 x 1/4" M2.5x.45mm, length 6mm	
Screw Bolt Circle Diameter	.586 ±.002	in.
Axial Length of Codewheel	.270	in.
Required Shaft Length (2)	.375 to .395	in.
Mounting Screw Torque	2-3	in-lbs

(1) 60000 rpm is the maximum rpm due to mechanical considerations. The maximum rpm due to the module's 60kHz maximum count frequency is (3600000/CPR).

(2) Includes axial play.

Single-ended Electrical

Specifications	Min.	Typ.	Max.	Units	Notes

Supply Voltage	4.5	5.0	5.5	V	
Supply Current		21	27	mA	no load
Low-level Output			0.4	V	I_{OL} = 6 mA
High-level Output	2.4			V	I_{OH} = -1 mA
Rise Time		500		ns	CL = 25 pF, RL = 2.7 kΩ
Fall Time		100		ns	

Differential Electrical

Specifications	Min.	Typ.	Max.	Units	Notes
Supply Voltage	4.5	5.0	5.5	V	
Supply Current		23	29	mA	no load
Single-Ended Output Voltage High		5.0		V	One TTL load
Single-Ended Output Voltage Low		0.4		V	One TTL load
Differential Output Voltage	3.0	3.8		V	RL = 100 ohm
Differential Output Rise/Fall Time			20	ns	

Phase Relationship

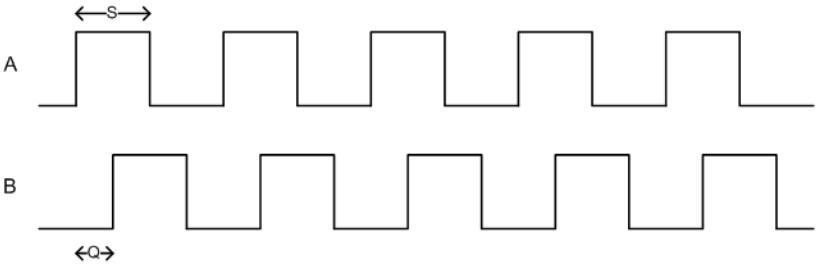

Parameter	Typ.	Max.	Units
Symmetry, S	180 ± 16	180 ± 75	electrical degrees
Quadrature Delay, Q	90 ± 10	90 ± 60	electrical degrees

(1) A leads B for clockwise shaft rotation, B leads A for counter clockwise shaft rotation viewed from the shaft/bushing side of the encoder.

(2) Typical values represent the encoder performance at typical mounting alignment, whereas the maximum values represent the encoder performance across the range of recommended mounting tolerance.

Pin-out

4-pin Single-ended (1)		6-pin Differential (2)	
Pin	Description	Pin	Description
1	+5VDC power	1	Ground
2	A channel	2	A channel
3	Ground	3	A- channel
4	B channel	4	+5VDC power
		5	B channel
		6	B- channel

(1) 4-pin single-ended mating connector isCON-MIC4
(2) 6-pin differential mating connector isCON-MIC6

Options

H-option (Hole In Cover)

The **H**-option adds a hole in the cover for the shaft to pass through:

- For shaft diameters of 1.5mm to 1/8", a 0.170" hole is supplied.
- For shaft diameters of 5/32" to 1/4", a 0.295" hole is supplied.

M-option (Metric Mounting Screws)

Provides alternate metric M2.5x.45mm, length 6mm screws. When**M**-option is NOT specified the default is #3-48 x 1/4" screws.

T-option (Transfer Adhesive)

When mounting holes are not available, a pre-applied transfer adhesive (with peel-off backing) is available for "stick-on" mounting. Use the centering tool (above) to position the base. **T**-option specifies transfer adhesive.

Before installation, cleaning the mounting surface with alcohol is recommended to remove dust and oil.

Accessories

1. Centering Tool

The centering tool is only included with the **-3** packaging option. It has to be ordered separately for other package options.

Part #: MCTOOL - (Shaft Diameter)
Description: This reusable tool provides a simple method for accurately centering the **E4P** base onto the shaft. A centering tool is highly recommended when using the **T**-option transfer adhesive.

2. Spacer Tool

A spacer tool is included for all packaging options.

Part #: SPACER-E4P
Description: This reusable tool is used to properly space the codewheel from the encoder.

Product Change Notifications

Title	Date	Description	Download
E4 - E4P - S4 Update - PCN 1014	11/29/2011	We have modifed the E4, E4P and S4 product lines in order to improve the performance and durability of the encoder. Changes include new molds for the plastic base and cover parts with an over-molded bushing in the S4 base, a new SMT connector (compatible with current mating connector)and a modified PCB profile to accommodate the new connector and plastic part modifications.	Download

Assembly Instructions

E4P Assembly Instructions - http://usdigital.com/assets/assembly/E4P%20Assembly%20Instructions.pdf

Ordering Information

E4P - [ ] - [ ] - [ ] - [ ] - [ ] - [ ] - [ ]

CPR	Bore	Index	Output	Cover	Base	Packaging
100	079 = *2mm*	N =*No Index*	S =*Single Ended*	D = *Default*	D =*Default*	B =*Encoder components packaged in bulk. One spacer tool per 100 encoders.*
108	091 = *2.3mm*		D = *Differential*	H =*Hole in Cover*	M =*Alternate metric M2.5x.45mm, length 6mm screws*	1 =*Each encoder packaged individually with one spacer tool per 100 encoders.*
120	098 = *2.5mm*				T =*Transfer Adhesive*	2 =*Each encoder packaged individually with one spacer tool per encoder.*
125	118 = *3mm*					3 =*Each encoder packaged individually with one spacer tool and one centering tool per encoder.*
128	125 = *1/8"*					
200	157 = *4mm*					
250	188 = *3/16"*					
256	197 = *5mm*					
300	236 = *6mm*					
360	250 = *1/4"*					

Notes

- Cables and connectors are not included and must be ordered separately.
- US Digital warrants its products against defects in materials and workmanship for two years. See complete warranty for details.

Base Pricing

Quantity	Price
1	$39.00
5	$31.56
10	$24.81

For volume discounts, please contact us at sales@usdigital.com or 800.736.0194.

- Add 39% per unit for **Output** of Differential
- Add 15% per unit for **Base** of Transfer Adhesive
- Add $3.00 per unit for **Packaging** of Each encoder packaged individually with one spacer tool per 100 encoders.

US DIGITAL
1400 NE 136th Avenue
Vancouver, Washington 98684, USA
info@usdigital.com
www.usdigital.com
Local: 360.260.2468
Toll-free: 800.736.0194

- Add $4.00 per unit for **Packaging** of Each encoder packaged individually with one spacer tool per encoder.
- Add $7.00 per unit for **Packaging** of Each encoder packaged individually with one spacer tool and one centering tool per encoder.

US DIGITAL
1400 NE 136th Avenue
Vancouver, Washington 98684, USA
info@usdigital.com
www.usdigital.com
Local: 360.260.2468
Toll-free: 800.736.0194