AM14U3 2018 Bumper Kit Assembly Guide

[am-3676_kit]

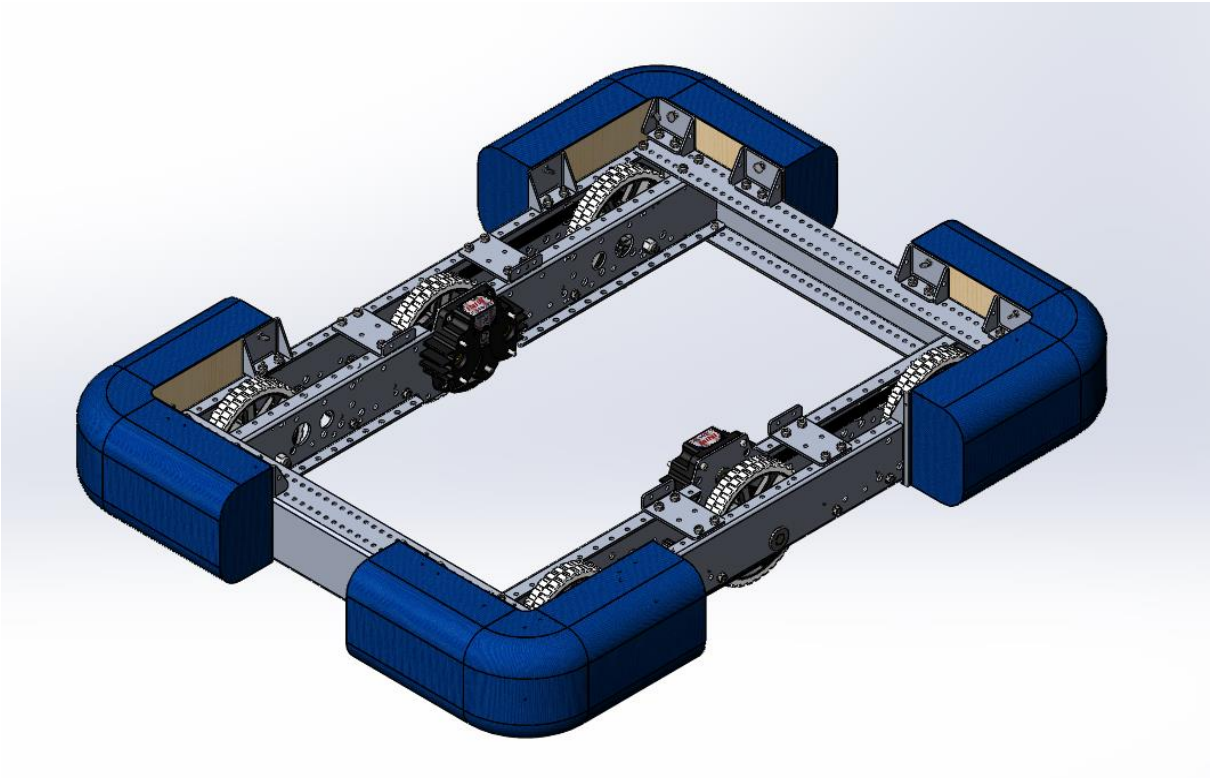

AndyMark AM14U3 2018 Bumper Kit – am-3676

Components	Part No.	QTY
Side Mount Bumper Bracket	am-3674	4
Front/Corner Bumper Bracket	am-3675	8
#10-32 3 Prong Tee Nut	am-1143	32
#10-32 x 0.625” SHCS	am-1007	24
#10-32 Nylock Nut	am-1042	24
#10-32 x 1.00” Thumb Screws	am-1390	16
Additional Items (not included)		
Robust Red Fabric	am-2675/am-2955	
Robust Blue Fabric	am-2676/am-2956	
¾” Robust Wood		
Industrial Staples		
Optional Items (not included)		
Wood Screws		64
P60 Mount Bracket	am-3066	16
#10-32 x 1.00” SHCS	am-1056	16
Tools Used		
Drill		
13/64” Drill Bit		
7/32” Drill Bit		
3/8” Socket	am-2740	1
5/32” Ball End Hex Driver	am-2751	1
3/8” Drive Ratchet Wrench	am-2753	1
Heavy Duty Stapler		
Hammer		

Step 1: Plan out which edges of the AM14U3 frame perimeter will be covered with bumpers. Ensure this design complies with all bumper rules. Brackets should be attached to the frame in the corners, at the ends of bumper segments, and behind any long bumper lengths.

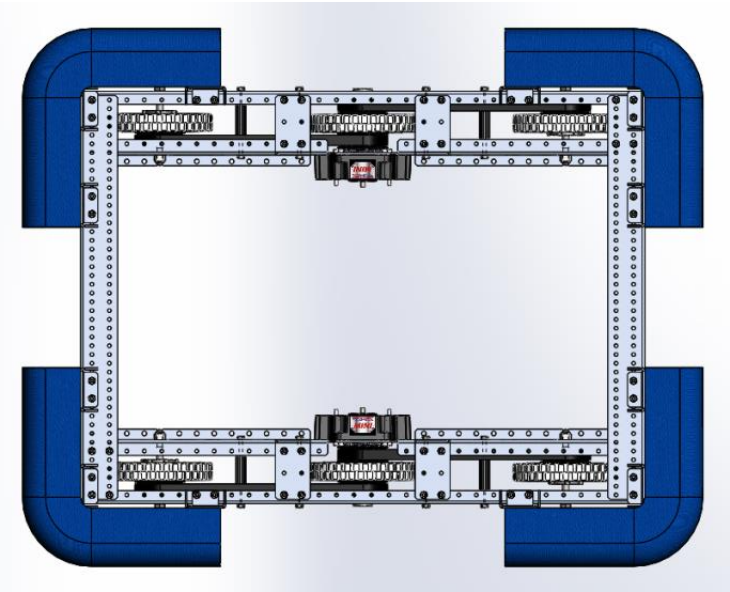

Step 2: Cut ¾” wood into bumper planks that are 5” tall and to desired lengths ensuring it meets the minimum length according to the rule book. For corner sections that overlap, a longer plank may be needed to comply with bumper rules. For the corner bumper configuration, 8 planks are needed for each red set and blue set of bumpers.

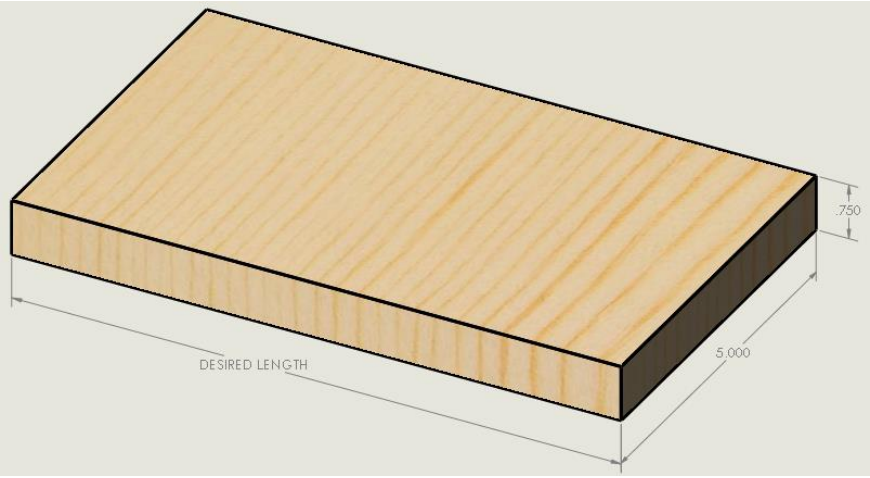

Step 3: Bumpers can either be made in straight sections or in sections that wrap around corners.

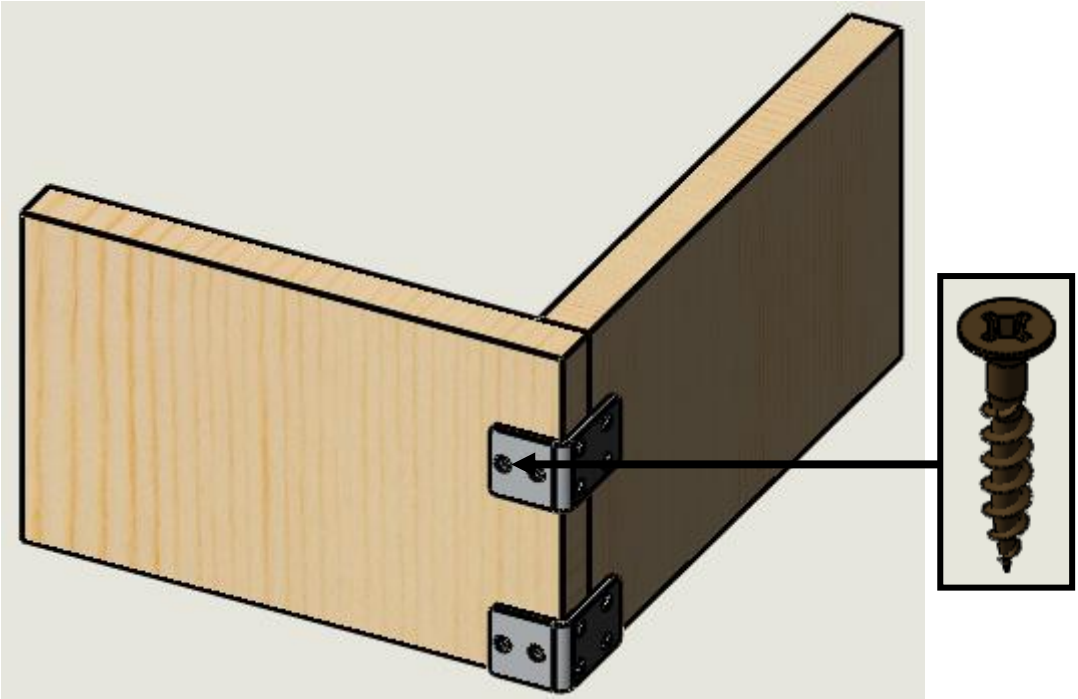

Tip:

To ensure that bumpers designed to wrap around corners are rigid, it is recommended that the corner edge be strengthened with angled corner connectors such as am-3066 (not included).

Step 4: Attach brackets as shown to the chassis. Brackets can be oriented to support both the corners of the chassis and the edges of the bumper planks. For longer bumper segments, additional brackets may be necessary to provide enough support.

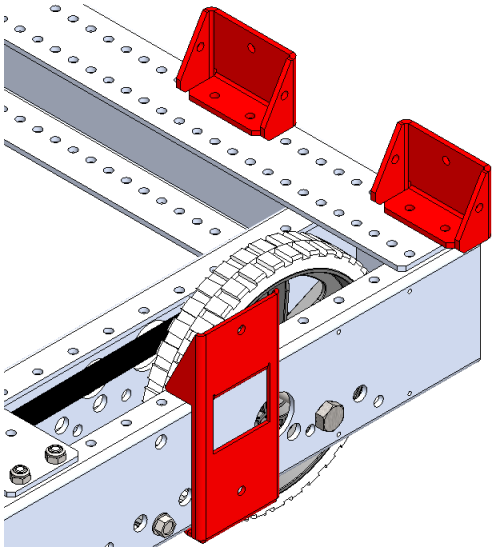

Step 5: Attach each bracket to the chassis frame using #10-32 x 0.625” SHCS (am-1007) and Nylock Nuts (am-1042). Each bracket should have two screws each securing the bracket to the top of each rail.

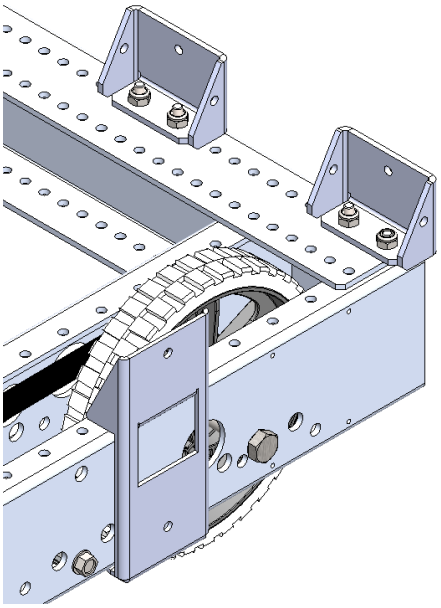

Step 6: Place the wood on the edge of the frame at the desired bumper height. Ensure bumpers height complies with all bumper rules. For 2018, when using 6” wheels the top edge of the wood planks can be aligned with the top edge of the side and front/corner brackets.

Step 7: Securely hold the planks and ensure the edges are flush with the side of the chassis. Mark the location where your holes should be. Then use a 13/64” drill bit to drill through the wood plank.

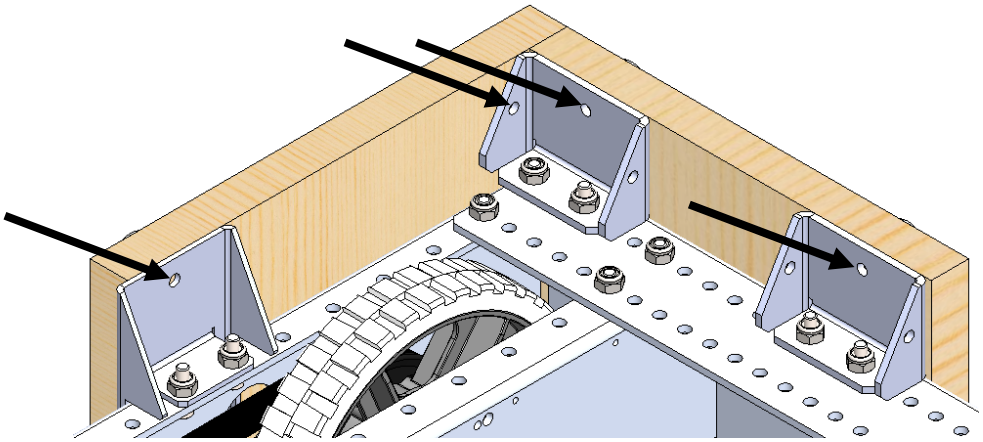

Tip:

After drilling, it is helpful to label which bumper plank goes to each location on the chassis in order to easily re-attach later.

Step 8: Remove the planks from the chassis and drill out the 13/64” holes with a 7/32” drill bit. This will allow the tee nuts (am-1143) to fit inside the hole.

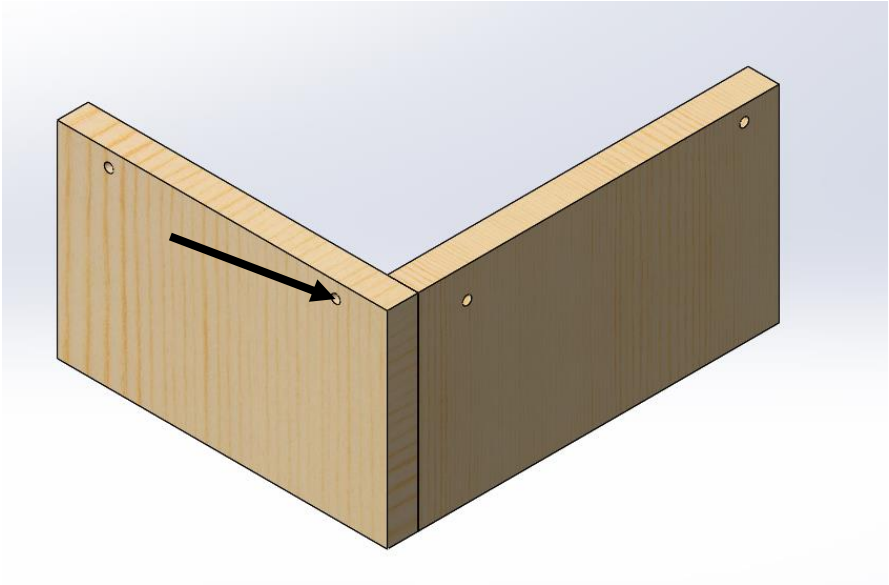

Step 9: Pound in the tee nuts into the outside faces of the bumper planks using a hammer. The face of the tee nut should be approximately flat with the wood.

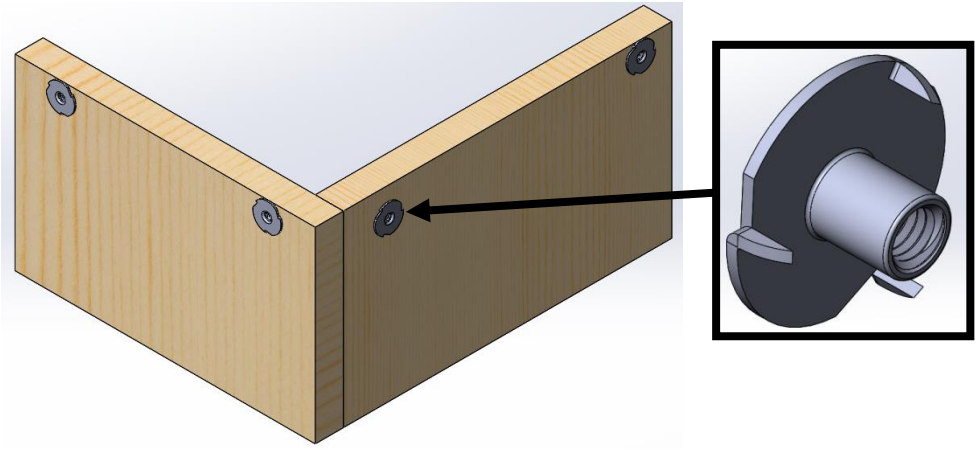

<u>Step 10</u>: Cut noodles to a length that matches the wood planks. Cut fabric large enough to wrap around noodles and wood with enough extra for stapling. If adding team numbers onto fabric it may be useful to do this before adding to bumper segments.

<u>Step 11</u>: Wrap fabric tightly around noodles. No noodles should be showing after wrapping. Staple fabric evenly along edge of bumper and trim any extra fabric. You will need to access the holes and hardware to attach bumpers frequently.

Repeat steps 4-11 for all bumper sets.

<u>Step 12</u>: Attach bumpers in the locations marked on the bumper planks with the thumb screws (am-1390) for easy removal.

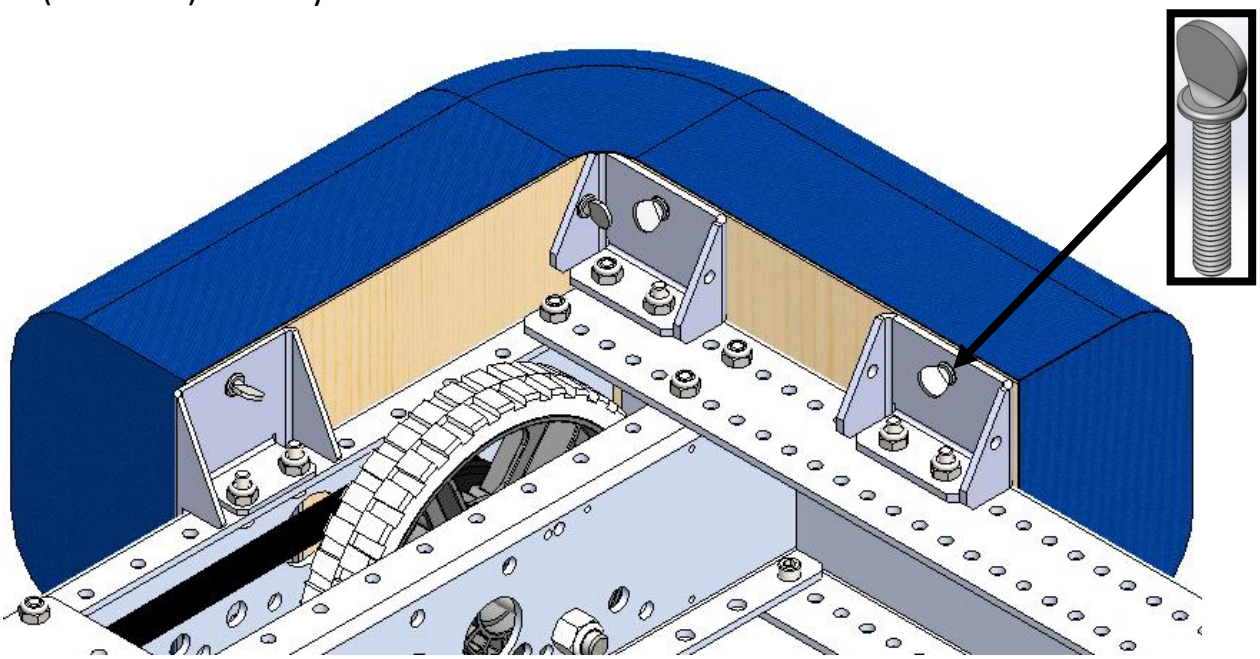

Tip:

Alternatively you can use #10-32 x 1.00" SHCS (am-1056) to attach your bumpers to the robot frame.