am-3417

Peanut Chassis	SECTION REV:	1	REV DATE:	1/2/2015	PART REV: 1

QTY	Parts Needed On This Page	Tools Needed On This Page
2	am-3090-57	Drill
4	am-1014	1/4" drill bit
4	am-1026	25/64" drill bit
4	am-1042	5/32" hex driver
16	am-1222	3/8" socket
		3/8" wrench

Step 1

Cut the peanut extrusion (am-3090-57) to the following lengths:

QTY:	LENGTH:
2	14"
6	12"
2	5.08"

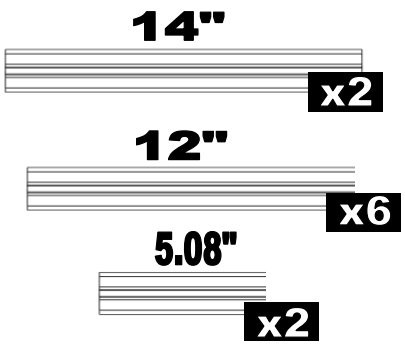

Step 2

3d print the Peanut Extrusion Hole Guide or cut a ¼" piece of peanut extrusion and use it as a hole guide. **TIP:** If using the cut extrusion clamp to the extrusion you are drilling into

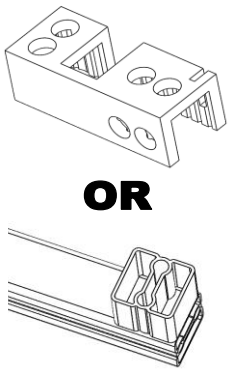

Step 3

Use the hole guide from step 2 to help. NOTE: Only use 4 of the 12" pieces for this step. Set the last 2 aside. They will have no holes. **The prints are on the website in the downloads page of Peanut Chassis.**

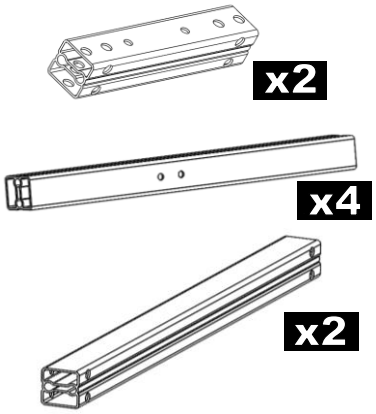

Step 4

Step 4: Take both REV pillow blocks (am-2904) and drill a 3/8" clearance hole in the center hole. **HINT:** Use 25/64" bit for best fit

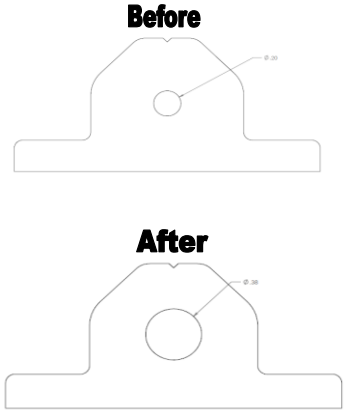

Step 5

Take REV pillow blocks from step 4 and attach it to the 5" pieces of peanut extrusion. Use #10-32x1500 Screw (am-1014) to bolt pillow block to peanut extrusion. On the back side put a #10 washer (am1026) and then #10-32 Nylock Nut (am-1042).

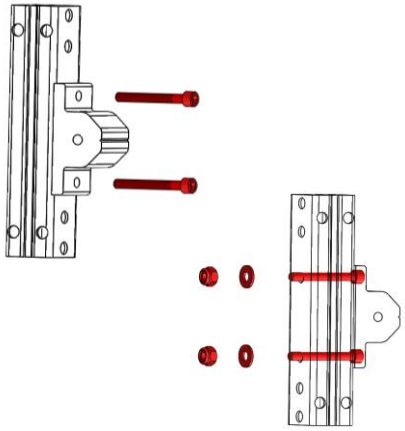

Step 6

Take both assembled pieces from Step 5 and bolt them into the 12" peanut extrusion without holes drilled in it. Use 1/4-20x2.5 thread forming screw (am-1222). Set this assembly aside.

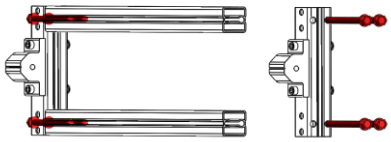

Step 7

Assemble a U-shaped frame. Use the 12" pieces that have holes in them. and one 14" piece. Use ¼-20 thread forming screw (am-1222) set aside.

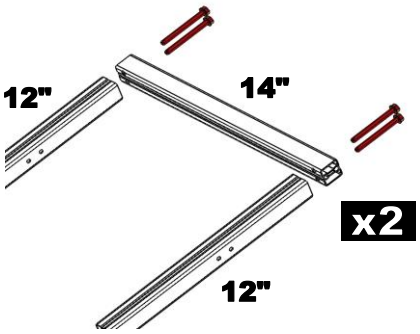

QTY	Parts Needed On This Page	Tools Needed On This Page
8	am-1222	5/32" hex driver
2	am-3230_107	3/8" socket
8	am-1182	3/8" wrench
8	am-1014	
16	am-1026	
8	am-1042	
2	am-1181	
2	am-1043	

Step 8

Take asembly from Step 6 and bolt it to the assembly from Step 7. Use ¼-20 thread forming screw (am-1222)

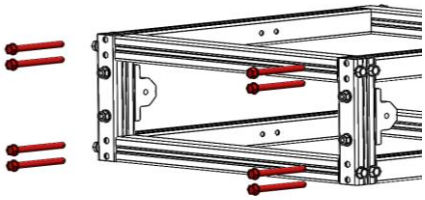

Step 9

Assemble Toughbox Micro (am-3230_107). Instructions are on the toughbox micro product page and are on the peanut chassis product page

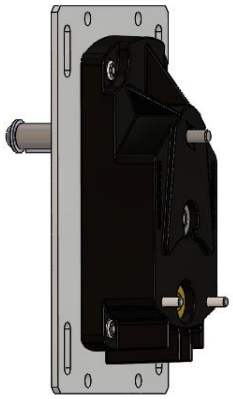

Step 10

The assebled Toughbox Micros should line up with the holes drilled in the 12" peanut and the peanut holes in the extrusion from the 14".

Step 11

Attach the Toughbox Micros with 1/4-20x1000 Thread forming screws (am-1182)

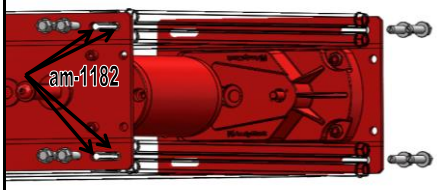

Step 12

In the middle of the 12" extrusion piece take four #10-32x1500 screw (am-1014) and put a #10 flat washer (am-1026) on each and put through holes. Do this to both sides of the chassis

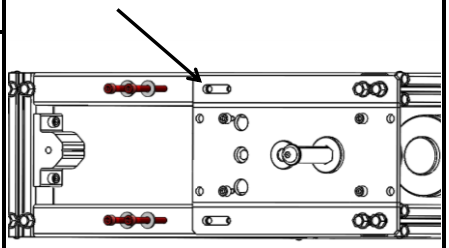

Step 13

On the other side put a #10 flat washer (am-1026) on each and thread in a #10-32 nylock nut (am-1042). Do this to both sides of the chassis.

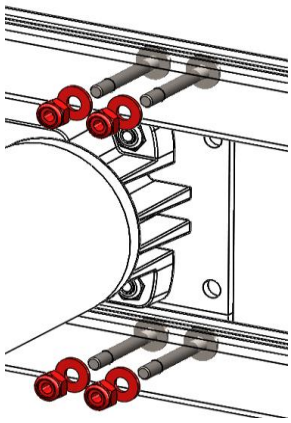

Step 14

On each of the toughboxes slide on a 3/16" thick spacer (am-1181). Then slide in a 1/8x1/8x0700 Machine key (am-1043)

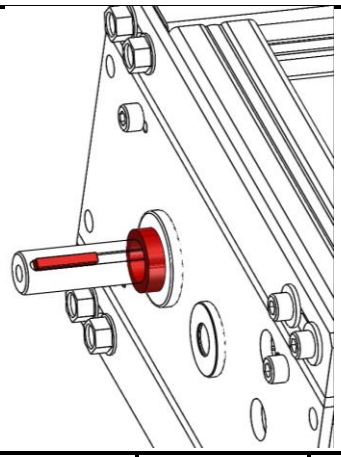

AndyMark	am-3417					PART REV: 1
	Peanut Chassis	SECTION REV:	1	REV DATE:	1/2/2015	

QTY	Parts Needed On This Page	Tools Needed On This Page
2	am-0077a	5/32" hex driver
2	am-0940a	5/16" socket
12	am-1266	9/16" wrench
8	am-1181	
2	am-1039	
2	am-1027	
2	am-1297	
2	am-3291	
2	am-1054	

Step 18

The end of the toughbox shaft is threaded inside, insert the ¼-20 x ½ screw (am-1039) through the 1/4" Washer (am-1027) and into the end of the output shaft. This will keep the wheel secure

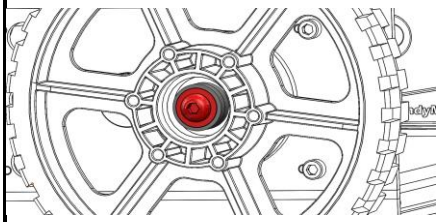

Step 15

Place 500 Key Hub (am-0077a) into Blue Stealth Wheel (am-0940a) and fasten with 10-24x1.25 Thread Forming Screw (am-1266)

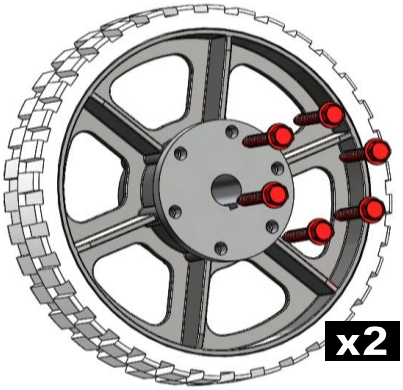

Step 19

On both sides push 3/8-16 x 4.25 bolt (am-1297) through the DuraOmni (am-3291), then through a 3/16" thick nylon spacer (am-1181). Push the bolt through the REV pillow block.

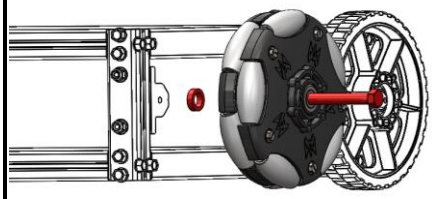

Step 16

Slide wheels onto the shaft of the toughbox.

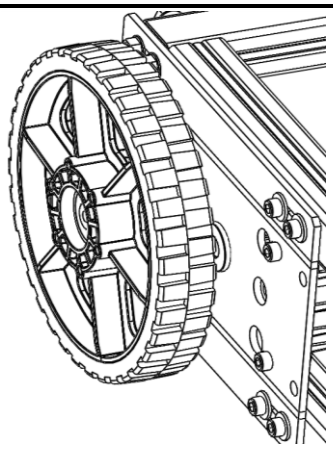

Step 20

On the other side put a 3/16" thick nylon spacer and then thread 3/8-16 nylock nut (am-1054). Tighten this all the way then back off a half of turn.

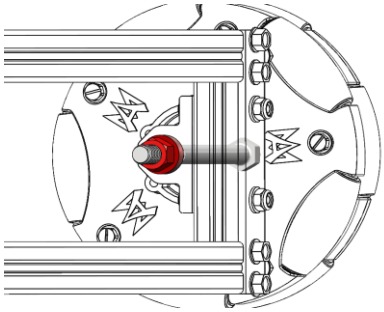

Step 17

Slide two 3/16" Thick Nylon Spacer (am-1181) on each shaft.

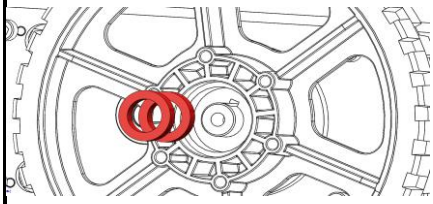

Step 21
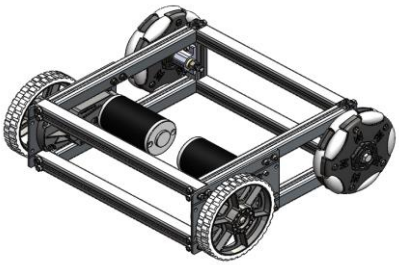
This is what the finished product should look like.